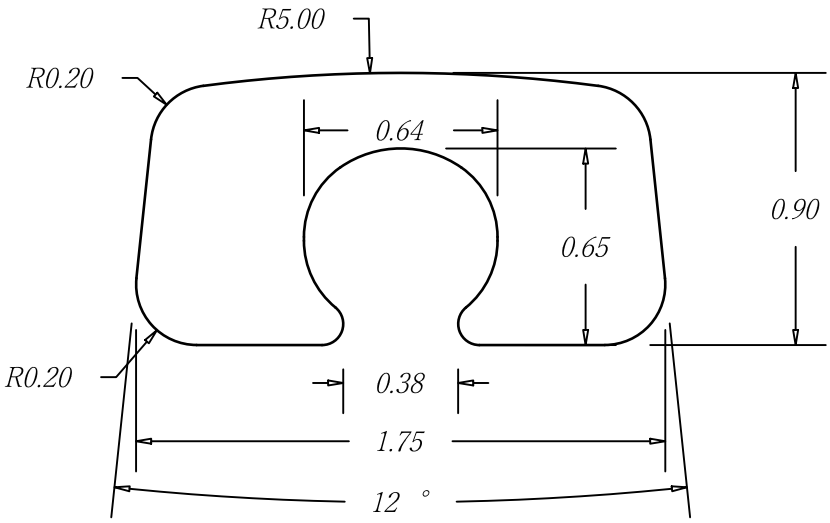
R5.00
R0.20
0.64
0.90
0.65
R0.20
0.38
1.75
12 °